Crop verses Weed Recognition Artificial neural networks:

Neural Network Plant Recognition for Vision Based Robotic Weed control

Chris Gliever, Ph.D. student (gliever@ece.ucdavis.edu)

David C Slaughter, Professor at UC Davis

Dept. of Biological & Agricultural Engineering

Paper 01-3104 Session 95: Real-Time Image Applications

ASAE 2001 International meeting August 1st, 9:35am

Introduction

Weed control during first 6 weeks greatly increase yield

$300 to produce one-hectare of cotton (13% weed control)

No weed control average decrease in yield is 25%

Main limiting resources: light, water & nutrients

Therefore seedline weed control most critical to yield

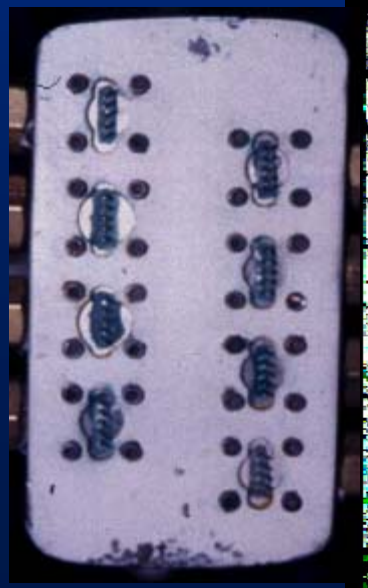

Courtesy of Ross Lamm

Diffuse Illumination Chamber for Cotton

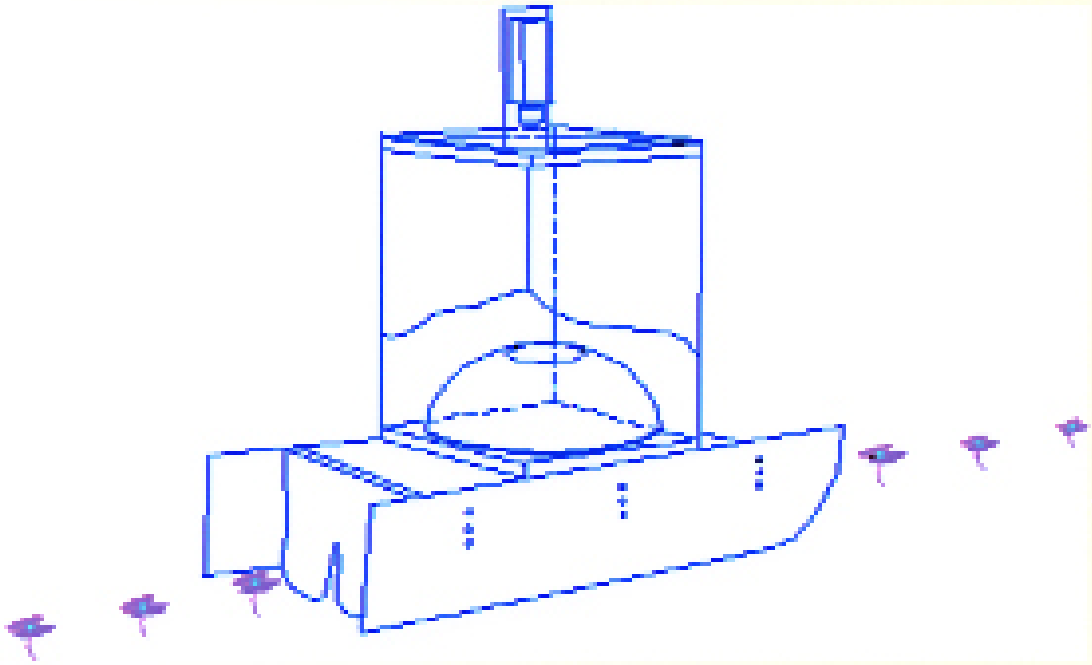

Courtesy of Ross Lamm

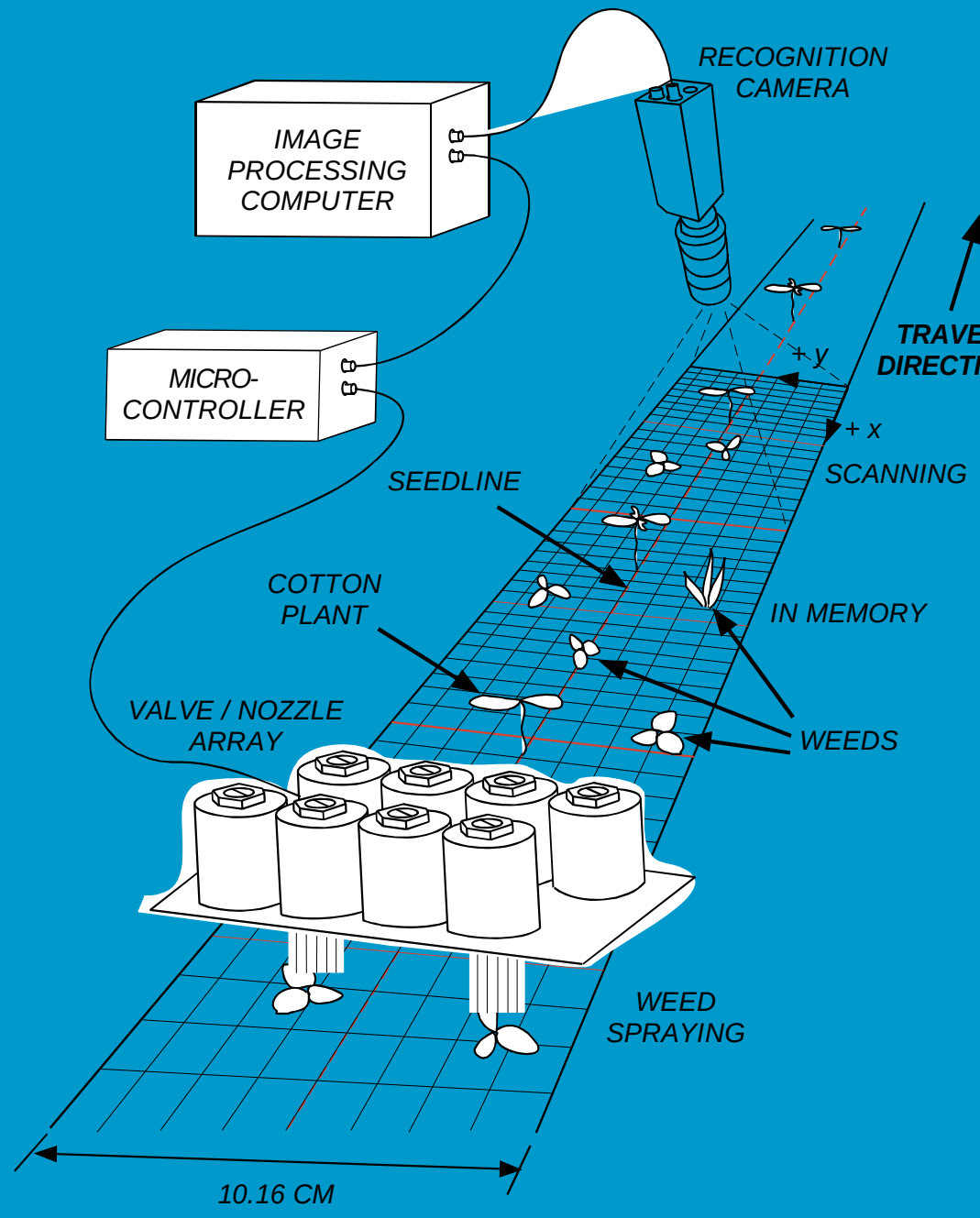

Weed sprayer developed by Won Suk Lee (1998)

1. Capture top view image of seedline.

2. Analyze image into crop/weed classes.

3. Make spray map

4. Apply herbicide only to weed foliage when micro-sprayer passes over leaves.

ZISC Radial Basis Function (RBF) ANN structure

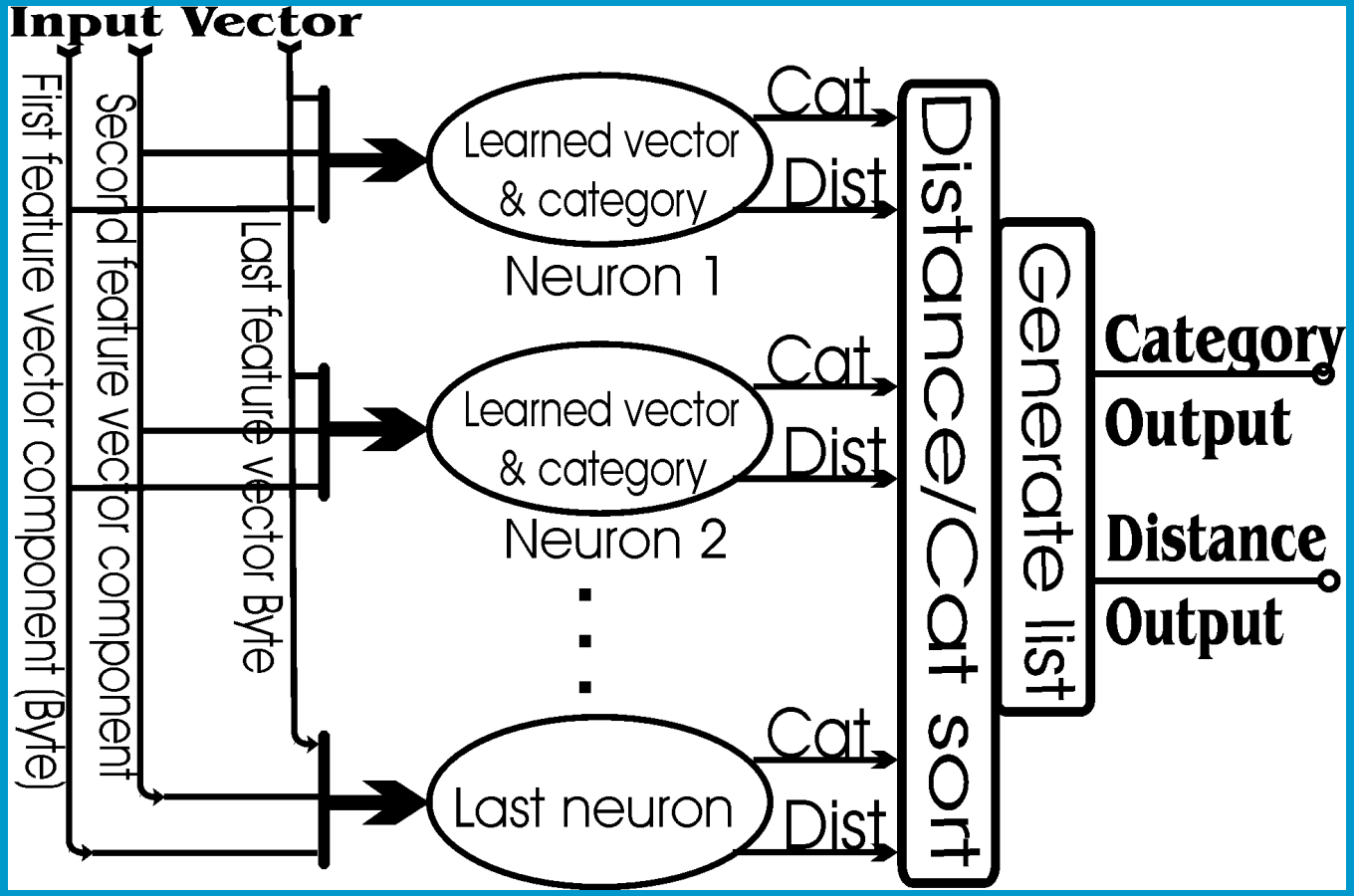

$$Dist_{Manhatton} = \sum_{\dim} |input_{\dim} - neuron_{\dim}|$$

Objectives

Evaluate low cost alternative weed/crop classifier engine by simulating ZISC hardware

Maintain software compatibility with microcontroller and therefore generate a spray map

Maintain hardware compatibility with micros-sprayer

Obtain an weed hit accuracy above 80%

Target a real-time solution that allows a minimum tractor speed of 2mph

Evaluate lower cost 1 CCD camera to 3 CCD camera

1 CCD verses 3 CCD Camera

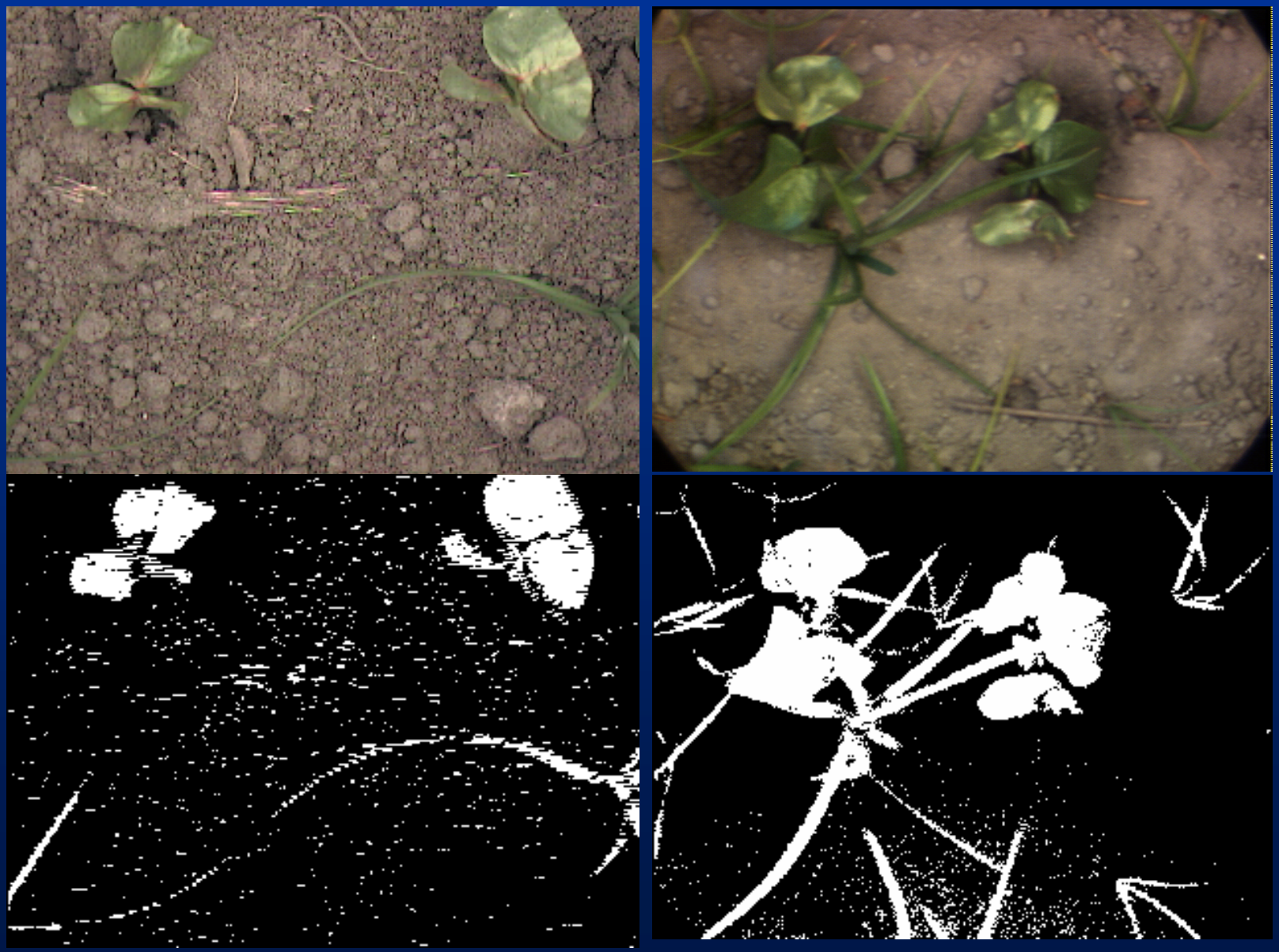

Building a label image for each training image

Segmenting image into plant & background regions

EG=(Green value-Blue value)+(Green value-Red value)

Creating an Edge image from a binary image

0	-1	0
-1	4	-1
0	-1	0

Laplace kernel Binary image Edge image

Creating the ANN input feature vector

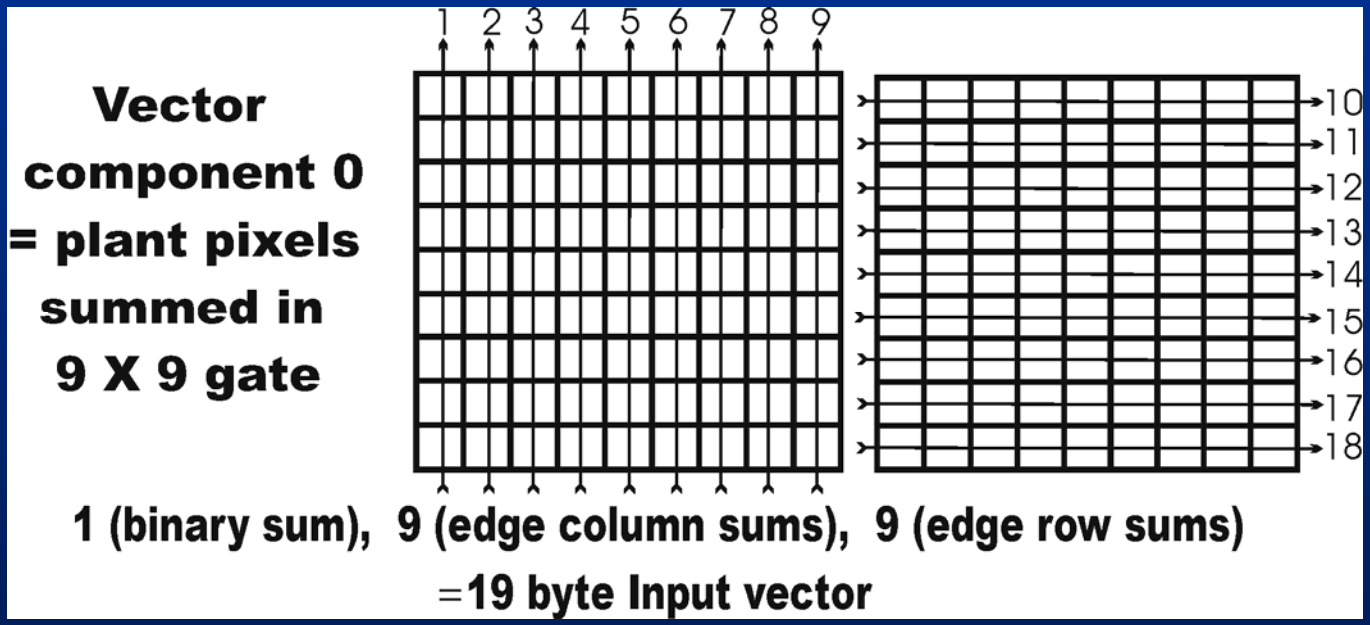

Example training from label and raw images

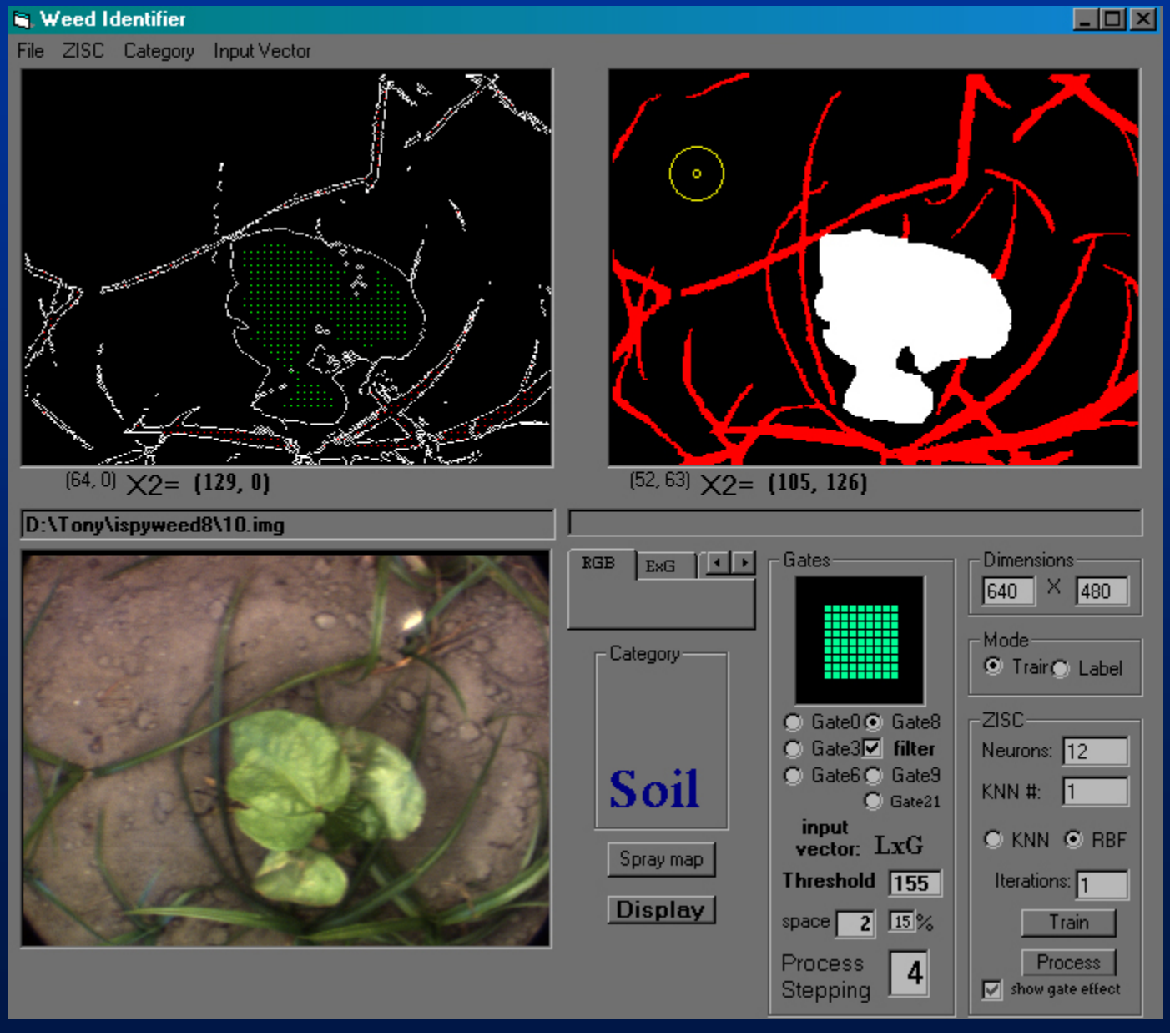

Example spray map and test result output of GUI

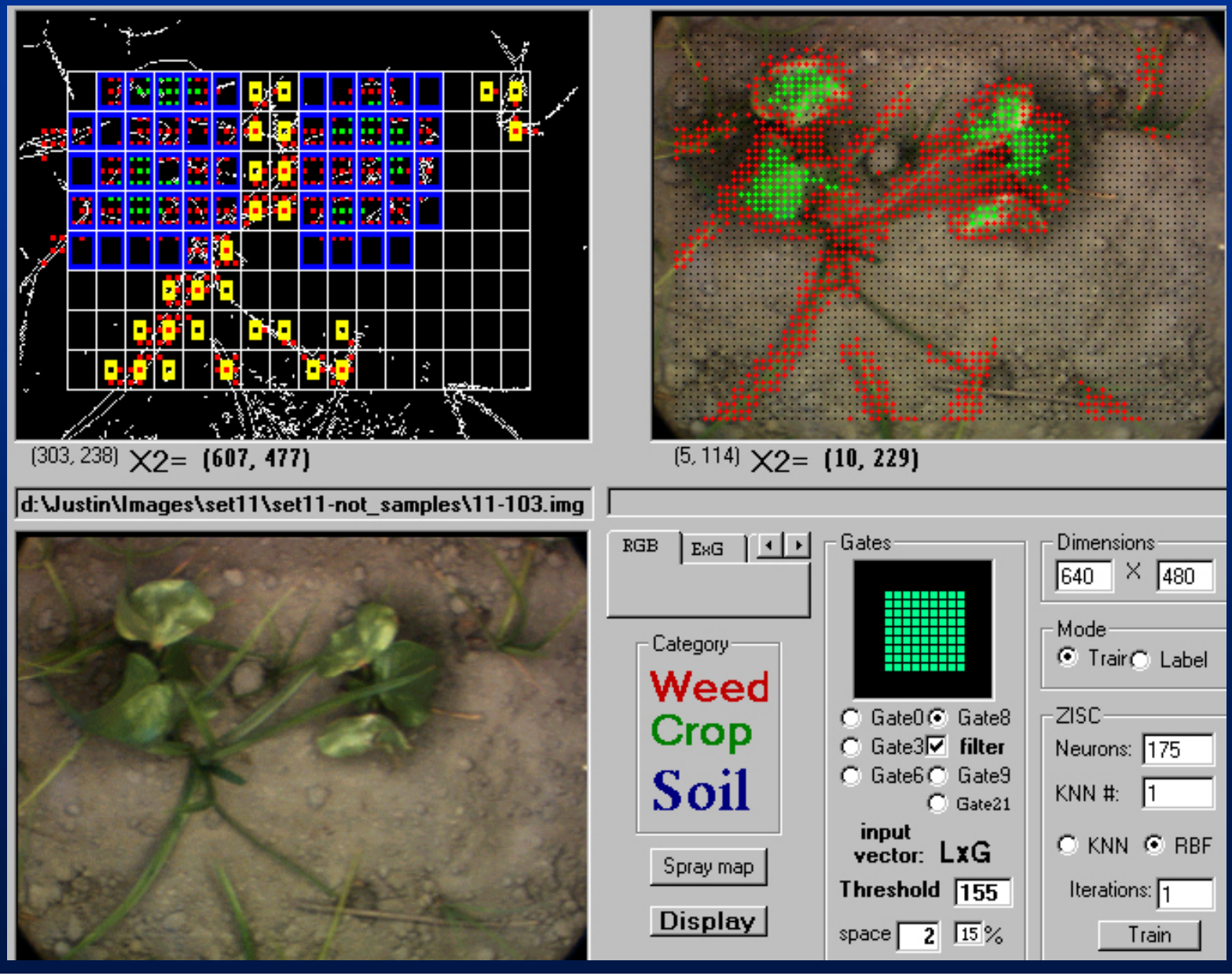

Experimental Results from two test sets

Corcoran 1999 image set 1	Corcoran 1999 image set 2
14 training & 47 testing images	15 training & 40 testing images
230 ZISC neurons generated	175 ZISC neurons generated
247 weeds & 60 cotton plants	198 weeds & 48 cotton plats
252 weeds hit &0 cotton plants hit	185 weeds hit &8 cotton plants hit
8% weed & 0% cotton error	7% weed & 17% cotton error
4% avg. error or 96% accuracy	12% avg. error or 88% accuracy

92% overall accuracy

91% cotton missed

93% weeds hit

Conclusion

The evaluation of ZISC hardware simulation resulted in a 92% overall recognition accuracy.

This algorithm shows promise for real-time robotic weed control.

Heavily damaged cotton leaves leads to crop misclassification.

Weed clumps as large as crop leads to weed misclassification within the center, but leaf tips still get mapped for spray.

Additional research into better feature vectors could ameliorate these potential sources of errors.

The lower cost 1-CCD generated too much color distortion to be an effective imaging device.